ORIGINAL RESEARCH **Open access**

Optimization-Based Load Frequency and Voltage Control for SPV/Wind Hybrid Systems Using GA and PSO

Victor Hugo[1*], Daniel Cruz[1], Javier Salazar[2]

Abstract

Regulating load frequency (LFC) and managing voltage (VC) constitute two of the most vital operational requirements in hybrid power generation networks. This study delivers a comparative evaluation of three distinctive control frameworks engineered for LFC and VC: a Genetic Algorithm (GA)-optimized Proportional-Integral-Derivative (PID) configuration, a Particle Swarm Optimization (PSO)-PID architecture, and a standard, conventional PID mechanism. A primary emphasis is placed on quantifying and analyzing the computational overhead and convergence velocity characteristic of each methodology. Along with the specific mathematical formulations required to model these hybrid systems, the theoretical foundation for each algorithm is delineated. The findings indicate that the standard PID loop achieves rapid convergence owing to the direct, unmediated modification of its control variables. However, simulation metrics confirm that this classical approach relies on manual calibration while demanding minimal computational infrastructure. Alternatively, the GA-PID variant integrates a genetic evolutionary cycle to determine optimal PID gains autonomously. While this iterative process often spans numerous generations before identifying an ideal solution, it yields vastly superior system regulation, albeit at the expense of greater computational burden than the baseline PID controller. Occupying a middle ground, the PSO-PID routine leverages swarm intelligence for parameter optimization; it surpasses the GA-PID in convergence rate but still requires significantly more iterations than the straightforward PID model. Mirroring the GA-PID, its structural complexity remains elevated due to the continuous execution of fitness functions and particle coordinate updates. Collectively, these optimization metrics illuminate the definitive trade-offs existing between processing demands and convergence speed across the three paradigms, offering engineering professionals a benchmark to align their specific control objectives with available computational assets.

Keywords Genetic algorithm, Particle swarm optimization, Load frequency control, Voltage control, PID

*Correspondence:
Victor Hugo
victor.hugo@unal.edu.co
[1] Department of Intelligent Renewable Energy Engineering, Faculty of Engineering, National University of Colombia, Bogota, Colombia
[2] Department of Artificial Intelligence for Smart Grids, Faculty of Engineering, University of Antioquia, Medellin, Colombia

Introduction

Integrating solar photovoltaic (SPV) installations and wind energy (WE) assets into a grid-connected hybrid configuration offers a highly advanced, ecologically sustainable strategy for addressing escalating global electricity needs. By bridging renewable generation infrastructure with traditional utility grids, this paradigm optimizes both power production and deployment. The co-located operation of SPV and WE systems capitalizes on their inherently complementary generation profiles, given that solar irradiance peaks primarily during daylight intervals. In contrast, wind velocity peaks vary across distinct diurnal cycles or seasonal windows. The deployment of such grid-interconnected hybrid frameworks addresses several imperative societal and technical objectives:

This is an open access article distributed under the terms of the Creative Commons Attribution-NonCommercial-ShareAlike 4.0 International License (CC BY-NC-SA 4.0), which permits non-commercial use, distribution, reproduction, and adaptation in any medium or format, provided that appropriate credit is given to the original author(s) and source, a link to the license is provided, and any changes made are indicated. Adapted material must be distributed under the same license.

© 2024 The Author(s). | Published by Institute of Smart Energy Systems Press

· Renewable energy integration: This architecture facilitates the seamless integration of SPV and WE generation into existing utility grids, thereby reducing reliance on carbon-intensive fossil fuels and accelerating the transition toward clean, sustainable energy portfolios.

· Energy generation and power reliability: By harvesting power simultaneously from wind and solar mediums, the combined system ensures a far more resilient and uninterrupted supply of electricity. The intrinsic volatility associated with individual wind and solar profiles is effectively buffered by their reciprocal generation patterns, establishing a highly stable and uniform power output.

· Maximum energy utilization: Conjoining SPV and WE mechanisms enables the exhaustive extraction of available natural resources. Solar arrays generate power throughout the day, whereas wind turbines can capture kinetic energy continuously across daytime and nocturnal periods. This maximizes total energy yield, reduces consumer dependence on utility-purchased power, and delivers substantial operational cost reductions.

· Environmental sustainability: The deployment of grid-tied hybrid networks directly advances environmental conservation by mitigating greenhouse gas emissions and reducing the localized ecological disruptions tied to conventional thermal generation. This yields a cleaner, more sustainable macroscopic energy matrix, driving international initiatives to curb climate degradation and atmospheric pollution.

· Grid stability and flexibility: Interlinking a central grid with a decentralized hybrid energy configuration yields major dividends in operational flexibility and network resilience. Excess power generated by the hybrid facility can be injected back into the utility network, alleviating transmission strain during peak load conditions. Conversely, during periods of localized generation deficits, the system can draw energy directly from the grid to guarantee uninterrupted service.

· Energy independence and resilience: Grid-connected hybrid installations foster localized energy autonomy, alleviating reliance on large-scale, centralized power plants. This introduces profound advantages in geographically isolated or off-grid sectors where expanding traditional transmission infrastructure is financially unviable. Ultimately, diversifying generation assets enhances systemic resilience, minimizing vulnerability to broad-scale blackouts and reinforcing regional energy security.

The realization of grid-interconnected hybrid systems, combining SPV and WE components, directly answers the modern imperative for eco-friendly, continuous power generation. By capturing the unique benefits of both solar and wind resources, this combined approach secures stable power output, advances environmental health, enhances grid reliability, and builds energy autonomy. This investigation presents a rigorous comparison of three distinct control paradigms—specifically, a Genetic Algorithm (GA)-PID, a Particle Swarm Optimization (PSO)-Proportional-Integral-Derivative (PID), and a standard PID controller—for executing Load Frequency Control (LFC) and Voltage Control (VC) within a hybrid generation framework.

Load frequency control

The LFC mechanism is deployed to sustain an exact equilibrium between total generation capacity and consumer load demands across an electrical power system. Within a hybrid generation network—which typically aggregates heterogeneous inputs such as variable renewables (e.g., wind and solar) and traditional thermal or hydroelectric installations—LFC serves as a cornerstone for ensuring operational stability and high reliability.

To demystify the mathematical dynamics of LFC within a hybrid framework, consider a stylized operational scenario. Assume a hybrid power system comprising two main generation assets: a wind power facility and a conventional thermal plant. While the wind farm injects variable renewable power, the thermal unit provides controllable, conventional

© 2024 The Author(s). | Published by Institute of Smart Energy Systems Press

generation. The ultimate goal is to dynamically regulate the output of each facility to satisfy changing load demands while keeping the overarching system frequency strictly within standard tolerances.

Let the core operational variables be defined as follows:

· St: Total system power supply (sum of wind and thermal power outputs)

· S1: Load demand

· D: Droop coefficient (a measure of the sensitivity of frequency changes to power imbalances)

· Δf: Deviation in system frequency from its nominal value

· Pw: Wind power output

· Pt: Thermal power output

Eq. 1 is the basic equation for LFC in a hybrid generation system.

$$S_t = S_l + D^* \Delta f \quad (1)$$

This equation states that the total system power supply (St) is equal to the load demand (Sl) plus a correction term proportional to the frequency deviation (Δf) multiplied by the droop coefficient (D). The main objective of this equation is to correct for any frequency discrepancies by adjusting the power outputs of the wind farm and thermal power plant.

Voltage control

Through the implementation of VC, the electrical network is maintained at a secure, stable voltage magnitude within strictly mandated operational limits. This process involves continuously modifying generator excitation levels or reactive power injection to modulate the system voltage profile. The core academic contributions of this comparative study evaluating GA-PID, PSO-PID, and traditional PID strategies for LFC and VC within a hybrid energy infrastructure are outlined below:

· Comprehensive comparison: This study offers an exhaustive performance benchmark between three distinct control paradigms applied to LFC and VC. It carefully interrogates the functionality of a classic PID setup, a GA-tuned PID layout, and a PSO-tuned PID architecture across the dual metrics of convergence speed and computational overhead.

· Mathematical explanation: The research delineates the analytical underpinnings of each control scheme, supplying the necessary foundational equations alongside practical contextual examples. It explicitly traces how these mathematical formulas and optimization routines are mapped onto LFC and VC challenges within a hybrid energy system.

· Convergence speed analysis: A detailed investigation into the convergence behavior of each controller type is executed. It emphasizes the structural variations in convergence dynamics between standard PID controls, GA-driven PID tuning, and PSO-driven PID optimization, mapping out the clear trade-offs governing how rapidly each system reaches steady-state optimization.

· Computational complexity assessment: The paper quantifies the computational resources consumed by each control strategy. It breaks down the processing overhead required to execute conventional PID loops, GA-optimized PID

© 2024 The Author(s). | Published by Institute of Smart Energy Systems Press

systems, and PSO-optimized PID networks for dual LFC and VC duties. This evaluation yields an empirical look at the computational hardware demands inherent to each configuration.

By offering a granular comparative analysis, this research deepens the academic comprehension of the unique competencies and operational boundaries of each control methodology. Consequently, power system engineers and researchers specializing in hybrid power grids can draw upon these insights to make data-driven selections regarding control topologies based on localized computing resources and real-time response constraints.

The presented study clarifies the overarching goals and functional roles of applying specialized optimization routines—specifically PID (Proportional-Integral-Derivative), Genetic Algorithm (GA), and Particle Swarm Optimization (PSO)—to govern Load Frequency Control (LFC) and voltage control (VC) inside a blended power generation facility. The primary highlights include:

· PID control: Classic PID loops are widely used for managing LFC and VC in modern hybrid power plants. These systems modulate active and reactive power outputs in response to detected shifts in frequency or voltage to preserve overall grid equilibrium. The mathematical expression of the PID controller incorporates distinct proportional, integral, and derivative operations.

· Genetic algorithm (GA): Evolutionary GA routines are deployed to automatically compute the ideal parameter weights for PID-based LFC and VC loops. Utilizing an objective fitness function to score controller effectiveness, the algorithm iteratively breeds a population of candidate parameter matrices to isolate the optimal gains.

· Load frequency control (LFC): In LFC applications, metaheuristic paths like GA and PSO are harnessed to calculate ideal PID parameters that systematically minimize any divergence of the operational frequency from its target baseline.

· Voltage control: Mirroring LFC procedures, GA and PSO schemes are directed toward voltage regulation tasks to rigorously minimize any deviation between the real-time voltage and the desired setpoint.

· Simulation setup: The experimental hybrid architecture features a 4 kW solar PV installation working alongside a 10 kW wind generation system, both synchronized with a simulated utility grid. Solid-state power electronics, primarily inverters, are utilized to modulate and convert the raw DC output into grid-compatible AC.

In short, this investigation underscores the utility of intelligent optimization heuristics in elevating the operational capabilities of hybrid power grids, while carefully detailing the engineering trade-offs regarding processing times and algorithmic convergence when selecting an automatic tuning framework.

Literature Review

For a grid-tied solar generation and transmission architecture, a trinary cascaded H-bridge multilevel inverter topology has been deployed. The framework implements a two-stage SPV mechanism incorporating a single-input-multiple-output single-ended primary inductance converter aligned with two CHB sub-structures for each electrical phase. Active power flow management and grid phase-matching are handled via a modified second-order generalized integral control scheme. This system ensures that injected grid currents remain completely balanced, purely sinusoidal, and exhibit a unity power factor, while concurrently purging any DC offset components from the load currents [1].

A separate inquiry focuses on the end-to-end integration of a Hybrid Energy Storage System (HESS) within the domain of SPV electrical generation. This work centers on blending two separate storage modalities: high-capacity energy storage

© 2024 The Author(s). | Published by Institute of Smart Energy Systems Press

and high-delivery power assets. The investigation systematically evaluates capacity scaling methodologies, power electronic converter topologies, and overarching energy management strategies. Through an analytical comparison of diverse sizing frameworks, converter layouts, and operational dispatch schemes, it illuminates prospective trajectories for the field. Additionally, active real-world commercial installations leveraging HESS for solar power stabilization are detailed and critiqued [2].

An Enhanced Dynamic Stability Control (EDSC) paradigm is introduced to stabilize the transient responses of electrical networks. Within this design, a bidirectional grid-interlinking DC-AC power converter adjusts the internal DC bus voltage of a DC Micro Grid (MG) to actively mirror and follow the grid frequency variations of an adjoining AC MG using localized sensor feedback. Coupling the DC voltage dynamics directly to the AC frequency allows the system to smoothly absorb and counteract sudden power shocks originating on either side of the network. Furthermore, decentralized Energy Storage Systems (ESSs) distributed across both the AC and DC microgrids are harmonized via a unified droop control scheme, significantly bolstering the dynamic controllability and transient ride-through of low-inertia grids [3].

To suppress frequency swings and counteract structural instability inside low-inertia Smart Hybrid Power Systems (SHPSs), a virtual inertia control framework driven by fleeted Electric Vehicles (EVs) has been engineered. Moreover, to address LFC demands within SHPS architectures plagued by high penetration levels of intermittent renewables and widespread EV charging, a resilient control methodology utilizing the Coefficient Diagram Method (CDM) is put forward. Time-domain simulation results demonstrate that this proposed control framework remains highly effective at stabilizing smart, low-inertia hybrid grids under a wide array of severe disturbance scenarios [4].

Modern interconnected power networks often bind together volatile loading profiles, clustered renewable generation assets, and electric transportation fleets. To continuously tune and discover the optimal parameter settings of a PID architecture, an advanced Twin Delayed Deep Deterministic (TD3) policy gradient-based reinforcement learning algorithm is executed. A multi-area interconnected grid model serves as the training environment for various deep reinforcement learning agents tasked with discovering optimal controller parameters. The integrated absolute area control error is used as the baseline reward signal to compute these gains, aiming to systematically reduce deviations in both tie-line power flows and nominal system frequencies [5].

To enhance power quality (PQ), a combined control strategy designated as a Fuzzy Logic PID Controller Filter with Multiple Complex Coefficients and Several Second-Order Generalized Integrator Frequency-Locked Loop (FLPID-MCCF-MSOGI-FLL) is established for a grid-tied SPV distribution network. Within this scheme, the MSOGI-FLL component mitigates current-source harmonics, whereas the MCCF component attenuates voltage-based harmonics. Concurrently, the FLPID loop ensures an uninterrupted power equilibrium between the AC and DC domains. To achieve optimal energy harvesting from the SPV array, a metaheuristic Particle Swarm Optimization (PSO)-assisted perturb-and-observe method is deployed. A comparative analysis examines the effectiveness of this proposed integrated control model across multiple parameters, including PQ enhancement, suppression of DC offsets, fundamental component isolation, frequency tracking, and grid synchronization capability [6].

A fractional-order integral-tilt derivative with filter (FOI-TDN) controller architecture is optimized via a hybridized Sine-Cosine algorithm coupled with a Fitness Dependent Optimizer (hSC-FDO). This system model incorporates physical limitations and complex behaviors, such as dead-band regions, data transmission propagation delays, boiler thermal dynamics, and strict generation-rate constraints. The overall performance of the network is fortified through the integration of thyristor-controlled phase shifters and capacitive energy storage devices. Ultimately, this hSC-FDO-optimized FOI-TDN management system is evaluated against conventional control arrangements within a multi-source, two-area power generation network [7].

An independent wind-solar hybrid power configuration designed to accommodate 3-phase 4-wire electrical loads is engineered, deployed, and validated through physical experimentation. This setup features a Doubly Fed Induction Generator (DFIG) that operates alongside a Maximum Power Point Tracking (MPPT) technique. Rotational velocity is

© 2024 The Author(s). | Published by Institute of Smart Energy Systems Press

governed via field-oriented control mechanics, while the spatial orientation of the rotor is derived utilizing a Model Reference Adaptive System (MRAS) observer framework. Dedicated load-side power converters are implemented to modulate system voltage and frequency, while a specialized DC-DC boost converter running an MPPT script isolates peak power from the SPV array [8].

A renewable-driven Distributed Generation System (DGS) incorporating both wind and solar infrastructure is designed to function in both grid-interconnected and isolated standalone modes. The framework applies a control configuration centered on Proportional Resonant (PR) paths combined with an Improved Affine Projection Versoria (IAPV) algorithm. Deploying the IAPV framework enhances grid current caliber by providing robust protection against non-fundamental harmonics and DC offset components. In its grid-connected state, the DGS operates with high flexibility, injecting steady yet adjustable electrical power into the main utility grid to anchor grid stability amid volatile solar and wind generation profiles [9].

For a decentralized distribution network integrating Plug-In Hybrid Electric Vehicles (PHEVs), smart programmable household thermal loads, and a localized combined-heat-and-power (CHP) plant, a methodology for tracking a secondary frequency control dispatch is introduced. To allocate control interventions while respecting the operating thresholds of both individual units and the overarching network, an aggregator utilizes a model predictive control approach. This strategy facilitates smooth multi-device harmonization and reinforces grid operational stability [10].

A grid-tied hybrid green energy infrastructure combining an SPV array and a Wind Energy Conversion System (WECS) is presented. To maximize kinetic power extraction, the WECS leverages a position-sensor-less Synchronous Reluctance Generator (SRG) managed by sensor-free field-oriented control strategies. Precise magnetic flux determination is accomplished through a combination of a Second-order Flux Estimation (SFE) approach and a Frequency-Locked Loop (FLL). The interface with the primary utility grid relies on a back-to-back linked 3-phase 2-leg Voltage Source Converter (VSC) design, featuring a shared DC-link bridge that couples the SPV array to the machine-side VSC of the wind power asset. The electrical power yielded by both the WECS and SPV array is distributed concurrently to the primary utility grid and localized consumers. The SRG system reaches maximum energy capture via rotational velocity management, whereas the SPV array optimizes output by controlling the shared DC-link voltage. Furthermore, an observer-driven control method is implemented within the Grid Side Converter (GSC) to enforce optimal power regulation and upgrade overall Power Quality (PQ), with the complete framework verified via a physical laboratory prototype [11].

Owing to restricted stability margins, hybrid renewable generation assets characterized by small-scale conventional thermal plants, an elevated share of wind energy, diminished local consumption profiles, and a lack of dedicated energy storage technologies introduce severe operational and regulatory complications. During the peak wind season of 2015, the San Cristobal wind-diesel power grid located in the Galapagos Islands, Ecuador, suffered a series of major blackouts. The explicit catalysts for these system collapses, which were triggered by the operation of frequency protection relays across multiple generation units, remained ambiguous. To address this, an analytical modeling tool has been established to investigate the transient dynamics of critical operational parameters during power failure events, aiming to isolate the underlying causes of these frequent anomalies [12].

Utilizing distributed power generation (DPG) components, a microgrid network integrates a pseudo-droop control framework, permitting reliable operation across isolated off-grid, generator-assisted, and grid-tied states. Maximizing operational efficiency is vital for increasing the utilization of green energy while maintaining dependable emergency backup power. A management strategy centered on microgrid line-frequency control optimizes the exchange of energy-control communication data among the DPG units during off-grid islanded intervals. When localized AC consumer demand drops below the real-time capacity of the SPV system, the control routine prevents overcharging of the battery bank. Crucially, the DPG assets govern battery state-of-charge limits and output currents without needing supplementary physical communication wiring, thereby refining the scalability of microgrid integration [13].

© 2024 The Author(s). | Published by Institute of Smart Energy Systems Press

Electrochemical battery storage is frequently coupled with SPV arrays to smooth out generation volatility. For hybrid microgrids configured with both AC and DC distribution buses running in islanded or grid-connected modes, a Comprehensive Control and Power Management System (CAPMS) is introduced. The CAPMS regulates network frequency and bus voltage parameters, governs the localized current and power profiles of individual units, and balances reciprocal power distributions across a wide spectrum of operational dynamics, including structural mode transitions, climate-driven fluctuations in temperature or solar irradiance, and sudden load steps [14]. For isolated off-grid locations, hybrid renewable setups backed by diesel generation represent an appealing architecture. Nevertheless, escalating levels of renewable integration trigger severe stability and security vulnerabilities throughout the system. Deploying demand response (DR) schemes through thermostatically controllable loads (TCLs)—such as domestic electric water heaters, air conditioning units, and ground-source heat pumps—can enhance grid elasticity and accommodate higher renewable absorption. A localized, decentralized DR framework for Direct Load Control (DLC) within isolated hybrid microgrids is customized and enhanced using electro-thermal dynamic models of air conditioners and ground-source heat pumps, alongside legacy formulations for electric water heaters (EWHs). Empirical case scenarios confirm the viability of the proposed strategy and models for provisioning primary frequency response, thereby facilitating greater renewable energy source integration [15].

This literature review offers a broad compendium of the diverse facets governing hybrid generation systems, documenting control methodologies, power electronic architectures, and green energy hybridization. Nonetheless, a conspicuous omission exists in the current literature: a rigorous, side-by-side performance comparison of separate control frameworks (specifically classical PID, GA-optimized PID, and PSO-optimized PID) tailored explicitly for Load Frequency Control (LFC) and voltage regulation in grid-interconnected hybrid setups. Although existing publications acknowledge the implementation of PID loops and metaheuristic tuning routines within these environments, they omit a methodical evaluation of their respective behavior in terms of processing times and convergence speeds.

The primary objective of this investigation is to address this academic omission by conducting a comparative performance evaluation of three distinct control topologies (standard PID, GA-optimized PID, and PSO-optimized PID) for managing voltage control and load frequency control (LFC) in grid-tied hybrid generation networks. The research intends to systematically quantify and assess the computational complexity and convergence rate of these control methodologies, clarifying the defining performance trade-offs. By carrying out this systematic comparison, the study seeks to assist engineering practitioners in the hybrid power sector in selecting data-driven control loops tailored to their distinct system requirements and available computational hardware.

The core contribution of this research lies in presenting a thorough comparison and structural analysis of control paradigms engineered for voltage control and LFC within grid-connected hybrid generation topologies. In particular:

· Performance evaluation: This investigation scrutinizes the operational capacity of three distinct control architectures (standard PID, GA-tuned PID, and PSO-tuned PID) across the key dimensions of processing overhead and convergence speed. This diagnostic provides deep insights into the behavior of these systems across diverse operational contexts.

· Trade-off analysis: The study isolates and evaluates the critical performance trade-offs inherent to each control methodology, delineating the particular advantages and limitations of each technique. It helps field engineers understand the operational ramifications of deploying a specific control layout versus alternative variants.

· Practical guidance: This research provides functional, real-world instructions to engineers working within the hybrid power sector, empowering them to select appropriate control strategies with high confidence. It accounts for pivotal operational variables such as system-level tracking precision, overall robustness, and network stability.

· Numerical results: The paper presents empirical data, including specific optimal controller gain configurations and Integral Time Absolute Error (ITAE) metrics, to support the comparative analysis and assist engineering teams in deploying the optimal control setup for their localized application needs.

© 2024 The Author(s). | Published by Institute of Smart Energy Systems Press

In summary, this investigation deepens the collective understanding of control strategies applicable to hybrid generation networks, facilitating the maximization of system performance while carefully navigating the dual constraints of algorithmic convergence speed and computational complexity.

Materials and Methods

Proportional-integral-derivative control

Proportional-integral-derivative (PID) control represents a widely adopted regulation mechanism for Load Frequency Control (LFC) frameworks within hybrid power systems [13, 14]. As illustrated in **Figure 1**, the primary objective of PID regulation is to modulate the power generation of the connected sources in response to frequency shifts, thereby preserving network stability. The mathematical formulation for PID-based LFC is given below:

$$S_t = S_l + P * e + I * \int edt + D * de \Big/ dt \quad (2)$$

Where St: Total system power supply, Si: Load demand, P: Proportional gain, I: Integral gain, D: Derivative gain, e. Frequency deviation (Δf), and t: Time (sec).

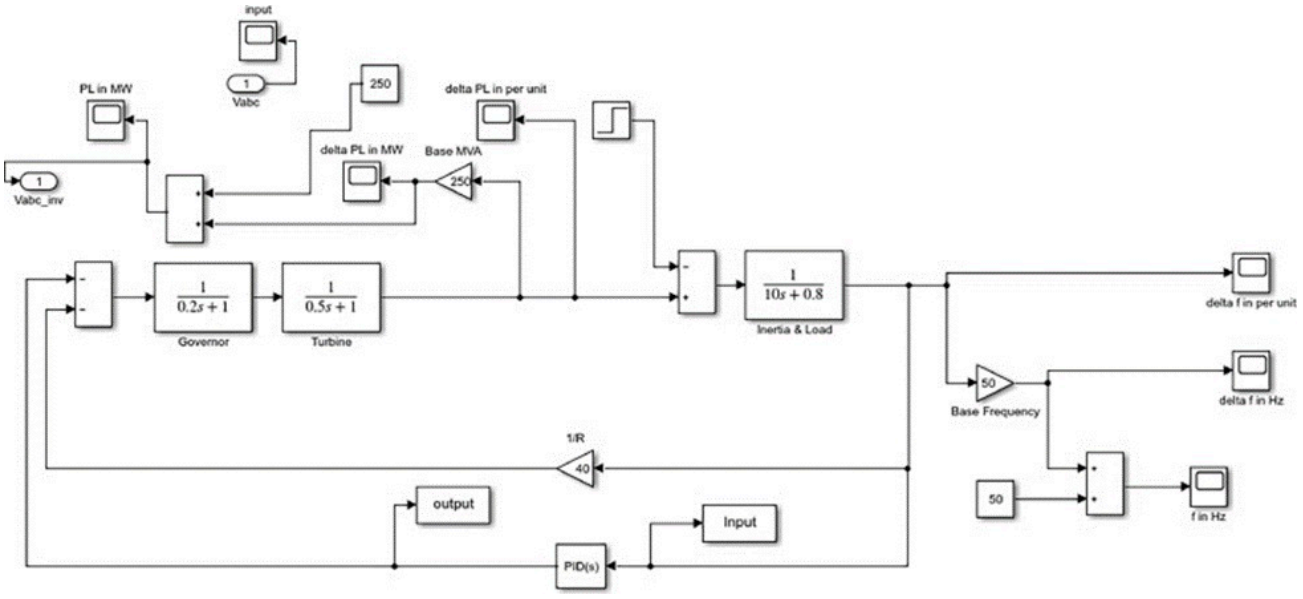

Figure 1. Simulink diagram of a PID-controlled LFC and VC system.

The proportional component modifies the power generation in accordance with the instantaneous frequency variance. Proportional contribution = P∗e. Meanwhile, the integral component aggregates the error continuously to resolve steady-state discrepancies. Integral contribution = I ∗ ∫ edt. Finally, the derivative element predicts upcoming error trajectories to introduce necessary damping. Derivative contribution = D ∗ de/dt

Aggregating the individual proportional, integral, and derivative components yields the overarching system power supply: St = S1 + Proportional contribution + Integral contribution + Derivative contribution

The PID mechanism computes the precise inputs from every parameter and subsequently modulates power generation to establish systemic equilibrium. Beyond LFC applications, PID strategies are equally viable for Voltage Control (VC) operations within hybrid networks. Under these conditions, the PID unit fine-tunes generation outputs to keep grid voltage strictly within standard operational thresholds. Consequently, PID frameworks serve as highly accessible, standardized

© 2024 The Author(s). | Published by Institute of Smart Energy Systems Press

tools for delivering regulatory solutions, unlike numerous advanced controllers that demand extensive bespoke modifications to function correctly. A concise comparative evaluation of various controller architectures, focusing specifically on computational overhead, is detailed below:

· PID controllers: When juxtaposed with highly complex control methodologies, standard PID controllers exhibit exceptionally low computational demands. Their processing requirements are fundamentally limited to basic arithmetic operations, specifically addition, subtraction, multiplication, and basic integration. Because this algorithmic simplicity remains largely unaffected by the overarching scale or complexity of the power grid, PID routines are highly suitable for real-time deployment using low-power processing hardware. The vast majority of standard embedded processing systems can seamlessly execute real-time PID loops without demanding any specialized architectural upgrades.

· Advanced controllers: In stark contrast, sophisticated regulation paradigms, such as model predictive control, necessitate the continuous, iterative calculation of complex optimization formulas. These methods are inherently resource-intensive, requiring substantial processing throughput and memory allocation. Because the computational intensity of these advanced loops is directly tied to system complexity, the processing burden scales dramatically with additional complex inputs.

· Real-time PID controllers: The minimal processing footprint of PID architectures grants them broad hardware independence for real-time operations. Conversely, the intense processing demands characteristic of more complex control frameworks often prevent conventional, off-the-shelf processors from executing them without latency. The concurrent processing requirements of advanced real-time control generally mandate the integration of supplementary, high-performance computing hardware to reach functional viability.

· Scalability PID controller: Regarding structural scalability, the inherent simplicity of PID computations ensures that this control strategy remains broadly applicable and easily maintained across networks of varying sizes, requiring minimal resource expenditure to deploy effectively.

· Advanced controller: The intense processing demands of advanced methodologies prevent them from being processed via linear critical paths; rather, they rely on complex nonlinear operational sequences. Because integrating these dense tasks alongside concurrent system models demands resource-heavy implementation pathways—such as custom-built control processors—the actualization of such frameworks becomes profoundly intricate. Based on this thorough assessment of controller dynamics, the selection of a PID structure for this study was explicitly driven by the specific physical dimensions of the experimental grid and the prohibitive financial costs associated with high-end computational hardware.

Particle swarm optimization control

The PSO technique can be deployed to automatically calibrate PID parameters for both VC and LFC operations within mixed-generation grids. Inherently a population-driven metaheuristic, PSO mimics the collective movement patterns of a biological swarm navigating toward an optimal target space [16, 17]. Functionally, the PSO-PID architecture resolves the mathematical constraints of both VC and LFC. To implement PSO-PID for LFC, an objective fitness function must be formulated to gauge system efficacy relative to the active PID weights. This fitness equation measures the discrepancy between the real-time grid frequency and the nominal baseline, with the algorithmic goal of driving this error to zero. To operationalize PSO-PID, the spatial coordinates of each particle are mapped directly to the individual PID gains [18]: Particle position: [P, I, D]

The PSO routine commences by dispersing a swarm of localized particles with randomized initial trajectories and spatial coordinates. These entities are continuously scored via the fitness function, which computes the Total Squared Error (TSE) separating the operational frequency from the target frequency across a designated temporal window: Fitness function = ∑ (Δf)2. Each particle progressively recalibrates its speed and trajectory by referencing its personal historical

© 2024 The Author(s). | Published by Institute of Smart Energy Systems Press

optimum (pbest) alongside the overarching global optimum discovered by the entire swarm (gbest). This cycle iterates continuously until reaching mathematical convergence, ultimately outputting the most effective matrix of PID parameters.

Likewise, the PSO-PID framework is highly applicable to VC tasks inside a hybrid energy network. As illustrated in **Figure 2,** the operative fitness function for this application tracks the variance between the actual grid voltage and the nominal reference voltage, aggressively seeking to neutralize this gap. The structural definitions for particle coordinates and objective functions in VC closely mirror those utilized in LFC. Specifically, the function computes the TSE governing the differential between the real-time voltage and the required threshold: Fitness function = ∑ (ΔV)2. The optimization sequence releases an initial swarm array [19, 20], scores each particle's performance via the fitness equation, and continuously modifies its coordinate mapping by weighing personal bests against the collective swarm best, ultimately culminating in an optimal PID configuration for VC. For both VC and LFC, the fundamental PSO routine isolates the gain values that effectively minimize the TSE fitness score, thereby bolstering grid stability and overall regulatory precision.

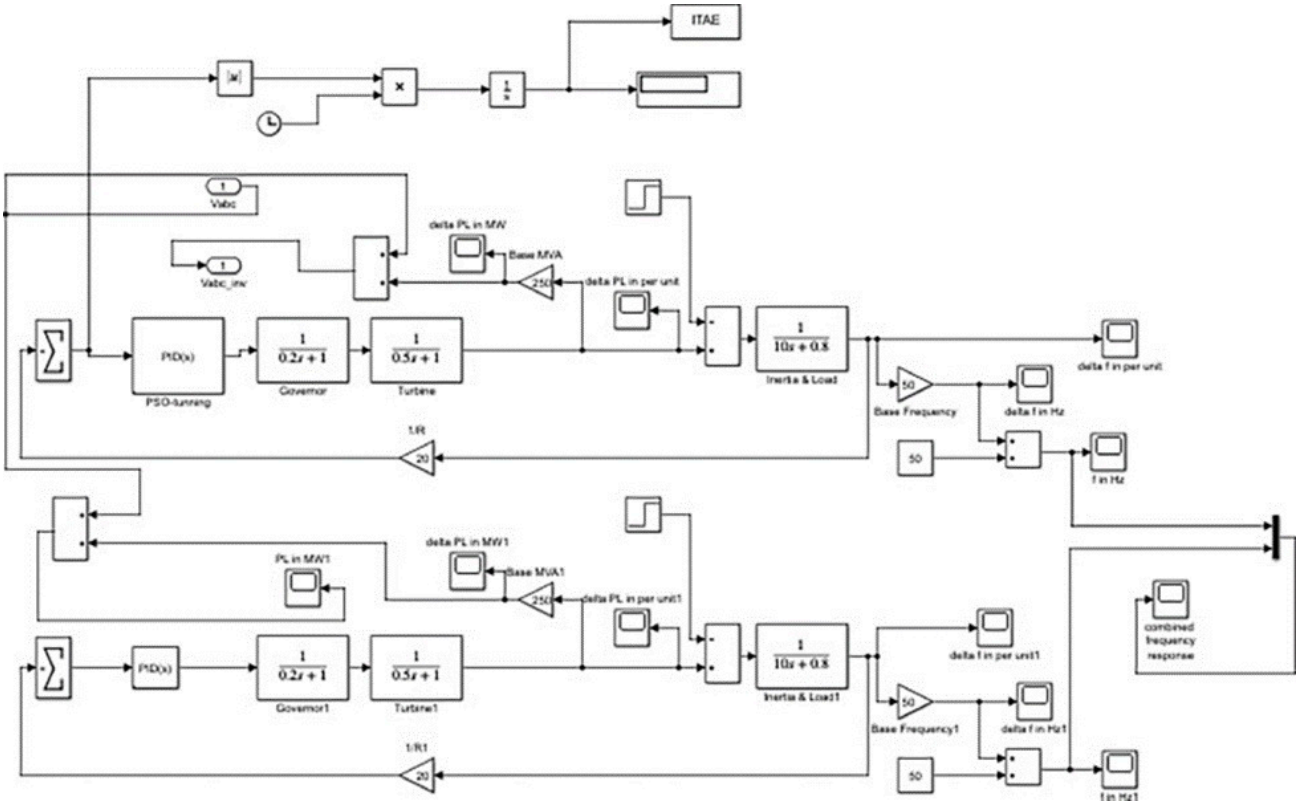

Figure 2. Simulink diagram of a PSO-PID LFC and VC system.

Genetic algorithm control

The genetic algorithm (GA) iteratively cultivates a biological-style population of data chromosomes, scoring their effectiveness through an objective fitness algorithm. As shown in **Figure 3**, this function determines the total squared error (TSE) separating the active system frequency from the required baseline throughout a specific operational interval: Fitness function = ∑ (Δf)2. The GA prioritizes chromosomes with superior fitness, subjecting them to evolutionary mechanisms such as mutation and crossover to produce a subsequent generation. This evolutionary loop endlessly repeats until algorithmic convergence is achieved, delivering the idealized suite of PID gains.

© 2024 The Author(s). | Published by Institute of Smart Energy Systems Press

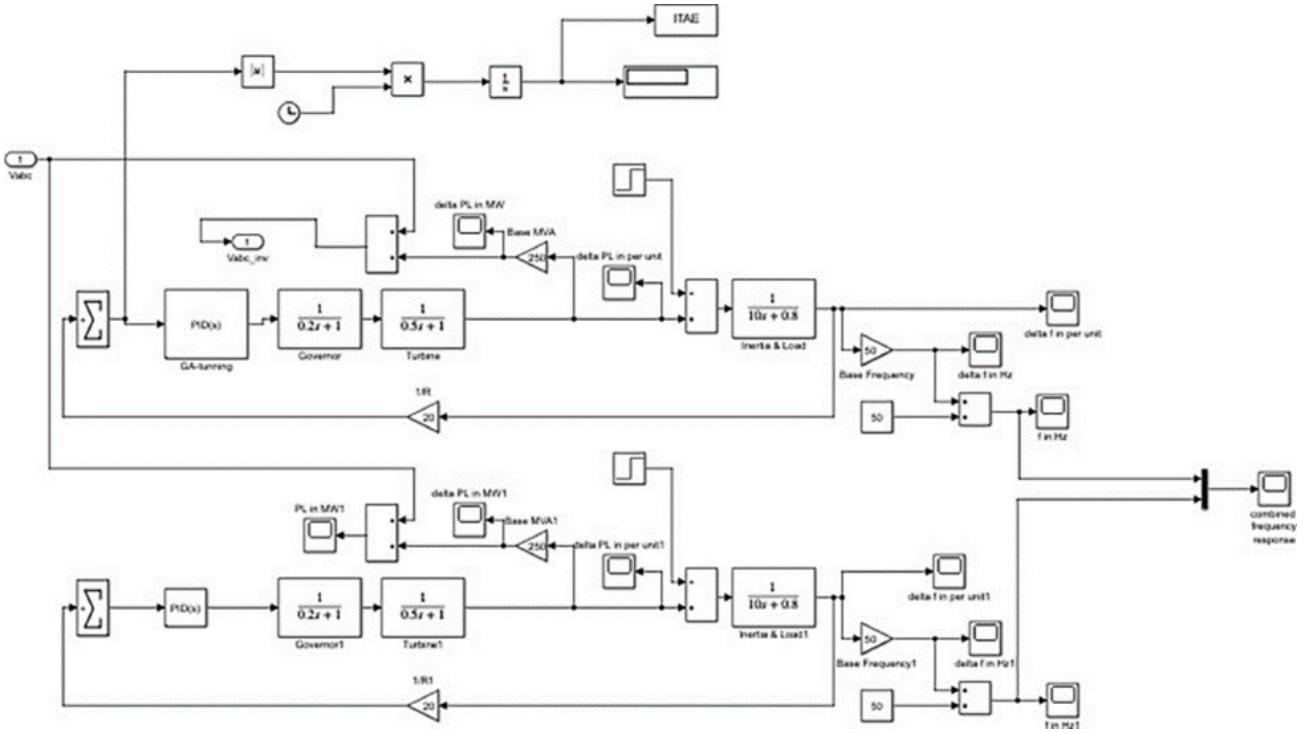

Figure 3. Simulink diagram of a GA-PID LFC and VC system.

In parallel, GA-PID paradigms are deployable for VC oversight inside hybrid grids. For this task, the fitness evaluation identifies and seeks to eliminate the delta between the actual system voltage and the commanded setpoint. Both the objective function architecture and the chromosomal encoding for VC are structured identically to those used in LFC operations. Consequently, the equation calculates the TSE by distinguishing the empirical voltage from the targeted value: Fitness function = Σ(ΔV)2.

The GA process systematically evolves candidate chromosomes, ranks their proficiency via the mathematical fitness function, and executes continuous cycles of selection, genetic crossover, and mutation until it definitively converges upon the most effective PID parameters for VC.

Across both VC and LFC operations, the GA isolates the exact PID weightings required to minimize the TSE, thereby improving the overall regulatory response and strengthening network stability. The precise deployment mechanics and convergence thresholds governing the GA are highly adaptable and fluctuate based on the specific parameters of the target system.

Simulation Setup

The Integral of Time-weighted Absolute Error (ITAE) serves as a standardized evaluative metric within control engineering to gauge longitudinal system performance. It mathematically scores a controller's efficiency in erasing the differential between the commanded reference point and the real-time empirical output, explicitly factoring in the temporal persistence of these errors. ITAE is highly advantageous for determining a regulatory system's capacity to suppress discrepancies with both speed and precision, as the formula assigns progressively heavier penalties to errors that persist later in the control window.

Within the scope of this investigation comparing regulatory frameworks for VC and LFC inside a grid-interconnected hybrid plant, the ITAE metric provides the benchmark to rigorously assess and contrast the operational caliber of various

© 2024 The Author(s). | Published by Institute of Smart Energy Systems Press

control algorithms (including standard PID, GA-optimized PID, and PSO-optimized PID) regarding their longitudinal control over grid voltage and frequency. To illustrate this mathematically, assume a control loop guided by a target reference signal, identified as R(t), and generating an actual output response, identified as Y(t).

The resulting error magnitude at any given temporal moment t is expressed as:

$$E(t) = R(t) - Y(t) \quad (3)$$

To derive the final ITAE value, one must compute the integral of the absolute error magnitude, multiplied by the elapsed time variable, across a designated temporal boundary stretching from t = a to t = b :

$$\text{ITAE} = \int [\text{a to b}]\ |E(t)| * tdt \quad (4)$$

This integral operation effectively aggregates the absolute error vectors scaled by time. Consequently, the final metric captures both the sheer severity of the deviation and the total temporal duration over which it persists.

Throughout this study, a distinct ITAE score is calculated for each evaluated control architecture (Conventional PID, GA-driven PID, and PSO-driven PID) by integrating the measured absolute error across a fixed temporal window for both VC and LFC applications. The control topology that ultimately yields the smallest ITAE score is recognized as demonstrating superior long-term performance regarding error suppression. Ultimately, the ITAE standard delivers a rigorous, quantitative method for juxtaposing the dynamic agility of these diverse strategies, yielding critical perspective on how efficiently each mechanism sustains baseline targets during dynamic operational runs.

The structural layout of the simulated grid-connected SPV/WE power asset is detailed in **Table 1,** delivering an exhaustive breakdown of the technical specifications. This combined infrastructure integrates a 10 kW Wind Energy (WE) installation with a 4 kW SPV array, both synchronized to the primary utility network via a central bus bar located at the point of common coupling. The solar component utilizes exactly 8 individual SPV panels. To guarantee rapid, high-efficiency energy extraction, a precise single-diode modeling technique is applied to the SPV hardware. The WE installation is rated for a 10 kW peak power output. The entire simulated environment is calibrated to interface with the utility network operating strictly at unity power factor. This direct grid interconnection serves to amplify the overarching reliability and output of the generation facility. Furthermore, all three evaluated metaheuristic approaches for VC and LFC are successfully simulated and verified in conjunction with the system's power inverter management logic.

Table 1. Specifications for the utility-grid-tied hybrid system.

Solar system parameters	**Wind system parameters**
Rated power – 4 kW	Rated power of wind energy farm – 10 kW
Total number of SPV panels – 8	Cut-in wind speed – 5 m/s
Output power of one SPV panel – 0.5 kW	Rated wind speed – 12 m/s
DC–AC inverter power factor – Unity	Cut-out wind speed – 9 m/s
Grid parameters	Number of rotor blades – 3
Grid power – 5 kW	Maximum rotor speed – 8500 m/s
Grid frequency – 50 Hz	Generator type – PMSG

© 2024 The Author(s). | Published by Institute of Smart Energy Systems Press

Transmission line parameters	Armature inductance – 0.000395 H
Transmission line voltage with load – 220 V	Stator resistance of PMSG – 0.425 Ω
Transmission line voltage without load – 440 V	Flux linkage – 0.433

Within the boundaries of the developed model, the SPV array features 8 individual solar modules wired sequentially in series, while the macroscopic grid simultaneously supplies two connected nonlinear electrical loads. To secure a stable interface with the main utility grid, the highly variable AC voltage outputs—fluctuating in both magnitude and frequency—produced by the raw SPV and WE assets are systematically rectified into direct current (DC) formats, establishing centralized DC links.

This preliminary power rectification is essential for managing and dispatching the harvested energy. Furthermore, the specialized grid-side inverter assumes a critical function within this combined topology. Its primary mandate is to invert the stabilized DC link voltage back into grid-compliant AC waveforms. By executing this transformation, the grid-side power electronics enable the local hybrid installation to lock onto the utility grid frequency, ensuring the smooth and continuous transmission of harvested green energy directly into the broader public supply matrix.

Results and Discussion

The empirical outcomes extracted from the simulation highlight the influence of GA- and PSO-optimized PID control loops on the voltage and frequency fluctuations of the grid system. Dynamic evaluations are conducted by contrasting their computational requirements and convergence rates:

· Traditional PID controllers exhibit a relatively swift convergence rate alongside minimal computational complexity.

· GA-optimized PID configurations demonstrate a prolonged convergence timeline that is heavily contingent upon chosen GA parameters, accompanied by moderate-to-high processing demands.

· PSO-optimized PID frameworks achieve faster convergence compared to the GA variant, yet remain slower than the baseline traditional PID, showing moderate-to-high computational complexity.

In the architectural layout under consideration, a baseline appraisal of a conventional PID methodology is conducted across utility-connected SPV and WE networks. To guarantee elevated precision, GA-PID and PSO-PID metaheuristic tuning methodologies are seamlessly integrated within the network. Simulation models are executed and scrutinized to establish concrete performance metrics. For conciseness, a high-level comparative summary of these techniques is provided to draw meaningful conclusions. Alternative optimization methodologies are highlighted within Maleki *et al*. [18], explicitly encompassing tabu search, simulated annealing, and harmony search algorithms. Furthermore, an optimization strategy rooted in biological principles is documented in Wang and Zhang [21].

The performance advantages of the developed strategy are validated by measuring load loss margins ranging from 0 to 20% alongside the corresponding economic energy savings. Concurrently, the efficacy of PSO coupled with artificial neural network configurations is explored for a conceptualized energy management model in Leon *et al*. [22].

A dedicated frequency regulation strategy is introduced in Daraz [23], wherein vital operational coefficients—specifically turbine gain, the droop factor, and the inertial constant—are regulated to minimize variations. This framework is deployed within a distinct microgrid architecture utilizing hybrid energy storage. Additionally, a control paradigm operating on a Jellyfish optimizer framework is utilized in Daraz *et al*. [24] across dual environments: a classical energy framework and a

© 2024 The Author(s). | Published by Institute of Smart Energy Systems Press

hybridized power system. The findings indicate that this methodology is highly dependable, successfully stabilizing the load frequency and ensuring the structural integrity of the tie-line.

Conversely, the operational throughput of a comparable approach is evaluated in Zhang *et al*. [25, 26] under the influence of various systemic non-linearities. This specific control architecture successfully suppresses transient peak overshoots by 89.12%, 83.11%, and 78.10% across the respective power areas. It similarly curtails the minimum overshoots by 79.12%, 73.99%, and 90% within identical multi-area systems. The designated model is specifically tuned using PSO and executed in MATLAB. The validity of this experimental validation is scrutinized by computing root mean squared errors.

The empirical findings demonstrate that the PSO mechanism successfully lowers error indices by 59% and 56% for the predictive estimation of energy indices. Furthermore, the integrated power electronics converters are coordinated at distinct points of common coupling, executing a critical role by transforming the DC electricity generated by the SPV arrays and wind generation components into grid-compliant AC electricity that is smoothly injected into the utility network.

Nonetheless, it is essential to highlight that power electronic conversion assets inevitably inject a certain degree of frequency distortion into the network. This stems primarily from their inherent nonlinear characteristics, which can cause waveform irregularities and trigger subsequent voltage and load frequency deviations within the generated AC supply. Consequently, the proposed PID, GA-PID, and PSO-PID control frameworks are coupled with the inverter units to stabilize the system's voltage and frequency responses.

Figure 4 provides an evaluation of how GA-based PID tuning shapes the network's frequency deviation profile. Critically, it offers a graphic depiction of the nonlinear dynamics introduced by the power electronic inverters, illustrating the subsequent wave distortions. Overall, these waveform distortions can negatively influence the ultimate power quality and operational yield of the energy generated by the hybridized system. **Figure 5** maps the influence of PSO- and PID-driven parameter tuning on the systemic frequency deviation. This figure provides a visual representation of the nonlinear operating characteristics caused by the power electronic inverters, detailing the resulting distortions in the generated wave.

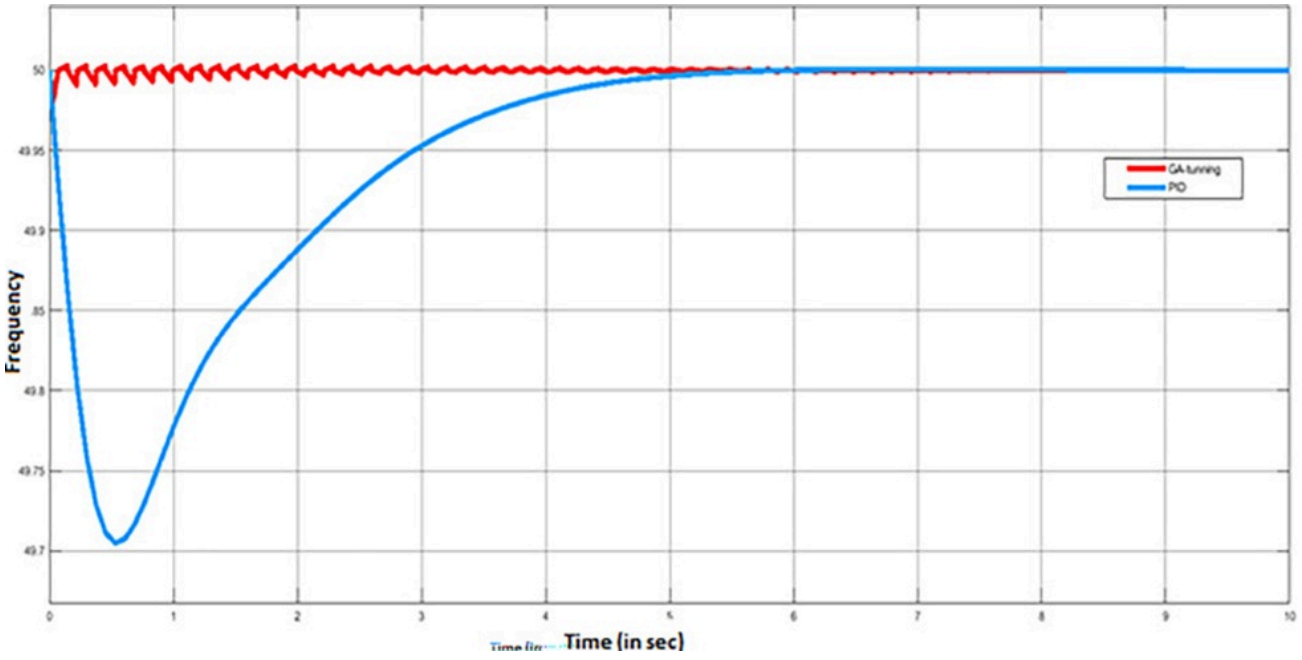

Figure 4. Frequency deviation of GA and PID-based tuning for the hybrid system.

© 2024 The Author(s). | Published by Institute of Smart Energy Systems Press

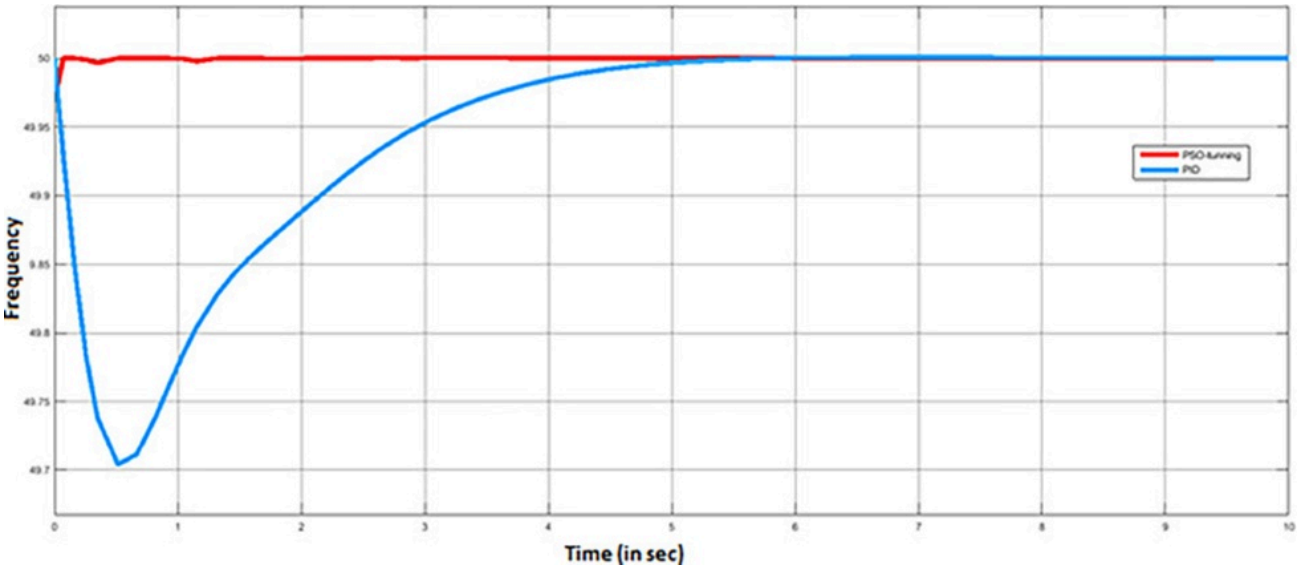

Figure 5. Frequency deviation of PSO and PID-based tuning for the hybrid system.

Crucially, **Figure 6** charts the effect of GA-driven parameter adjustment on the voltage variations within the grid. It provides a visual representation of the nonlinear characteristics associated with power electronic converters, emphasizing the resulting distortions in the voltage waveform. **Figure 7** tracks the consequences of PSO-based voltage regulation across the power network. It details the nonlinear characteristics stemming from the power electronic converters, displaying the subsequent distortions present in the output waveform**. Figure 8** demonstrates the outcome of baseline PID-based regulation on voltage deviations within the system. It clearly depicts the nonlinear actions induced by the power electronic converters, exposing the waveform distortions generated at the output.

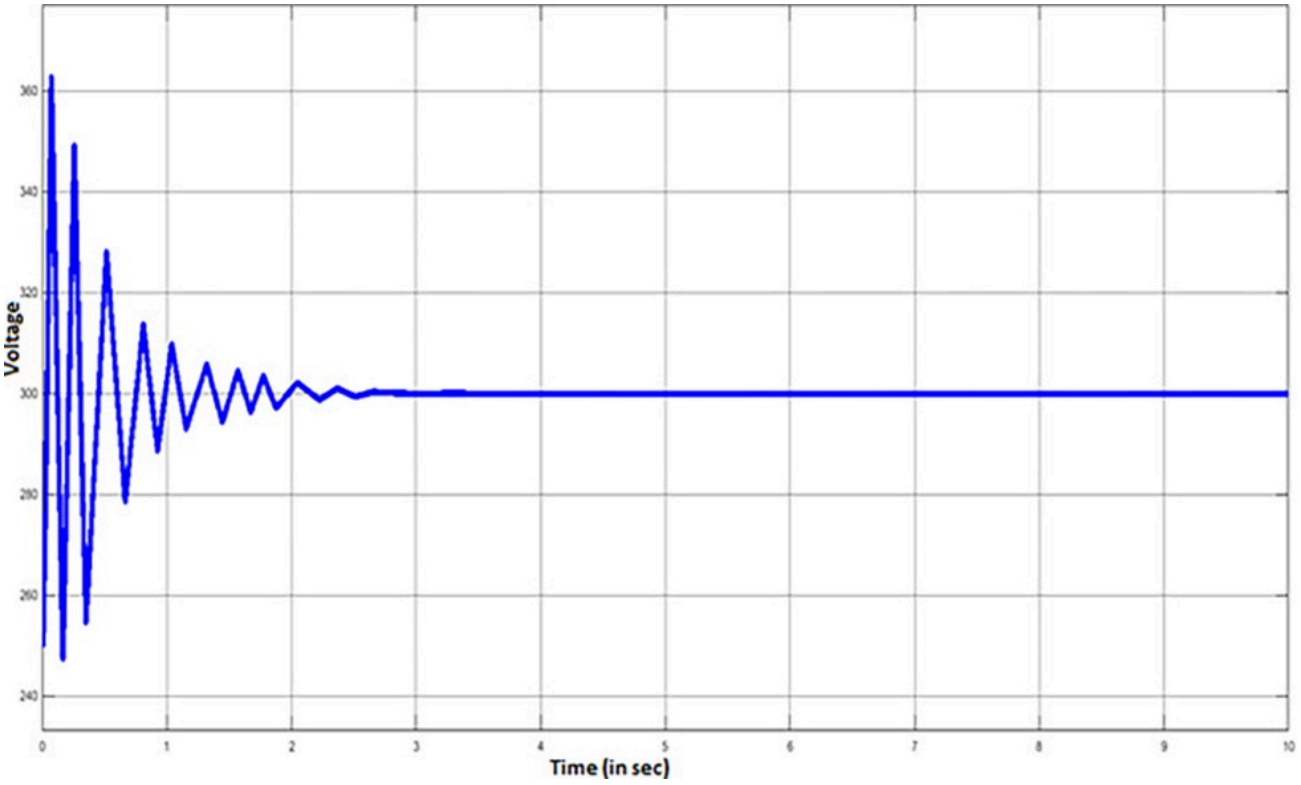

Figure 6. Voltage deviation of GA based tuning for hybrid system.

© 2024 The Author(s). | Published by Institute of Smart Energy Systems Press

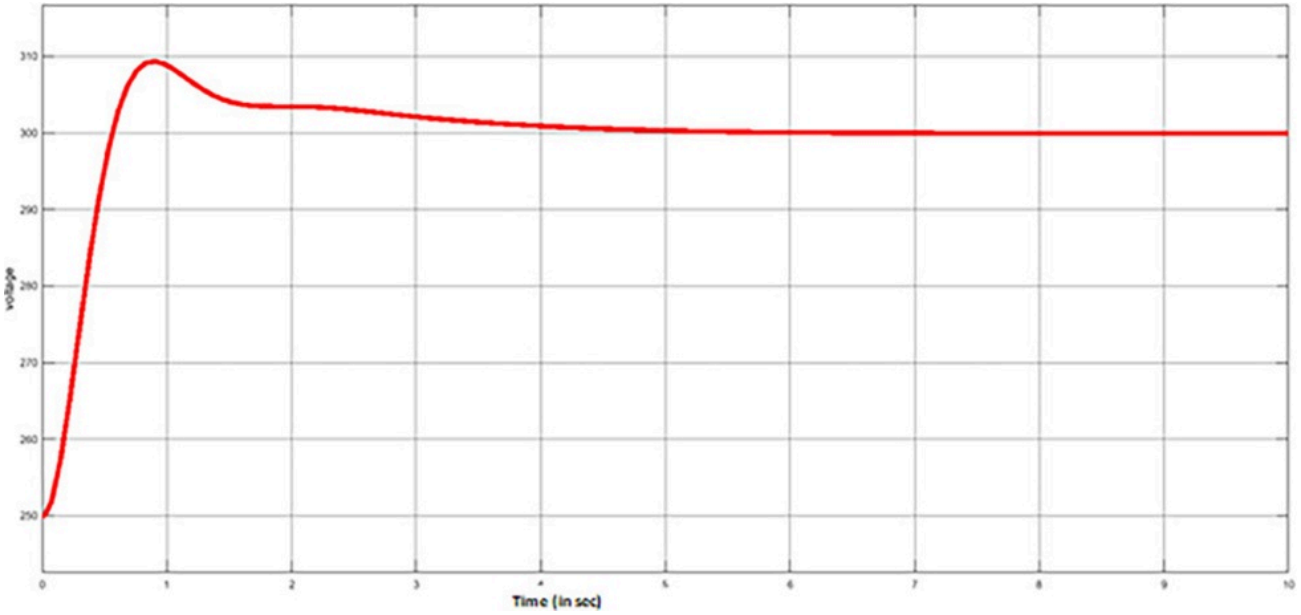

Figure 7. Voltage deviation of PSO-based tuning for hybrid system.

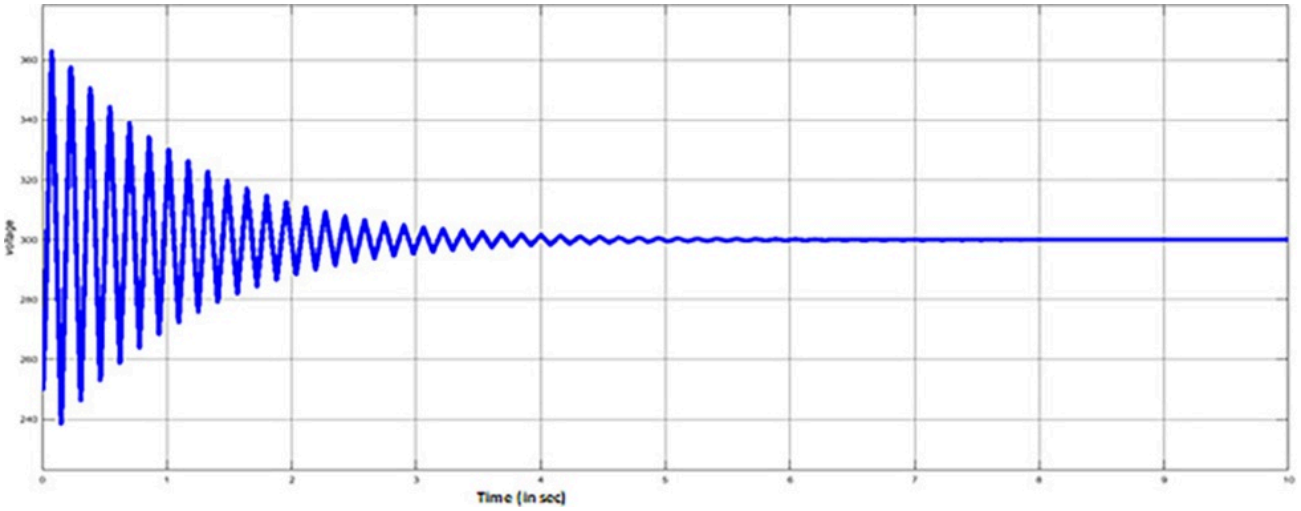

Figure 8. Voltage deviation of PID-based tuning for hybrid system.

An analytical cross-comparison among the GA-PID, PSO-PID, and conventional PID loops for both LFC and VC within a mixed-generation network is cataloged in **Tables 2 and 3**, taking into account both the processing complexity and the convergence tracking speed of the three setups.

Table 2. Comparative analysis for various controllers for LFC.

Type of controller	Convergence speed	Computational complexity
Traditional PID	Relatively quick	Low
GA-PID	Slower; depends on genetic algorithm settings	Moderate to high
PSO-PID	Faster than GA-PID, yet slower than traditional PID	Moderate to high

© 2024 The Author(s). | Published by Institute of Smart Energy Systems Press

Table 3. Comparative analysis for various controllers for VC.

Type of controller	Convergence speed	Computational complexity
Conventional PID	Comparatively fast response	Low
GA-based PID (GA-PID)	Slower convergence, varying with genetic algorithm settings	Medium to high
PSO-based PID (PSO-PID)	Faster convergence than GA-PID but slower than standard PID	Medium to high

For both VC and LFC operations, the regulation capability of the GA-PID and PSO-PID architectures depends closely on the specific execution of the optimization process and the defined fitness equations. Juxtaposing these three methods—namely conventional PID, GA-PID, and PSO-PID—requires quantifying their core control indices for systemic robustness, target-tracking precision, and network stability across fluctuating operational states. The optimization algorithm chosen for this work is PSO, selected based on factors such as processing overhead and convergence profiles within the modeled system.

Table 4 compiles the calibrated PID gain constants derived from the three separate methodologies. The gain settings isolated via the PSO-PID approach are notably lower than those produced by the alternative two schemes. Notably, a lower integral gain constant dramatically shortens the settling time of both the frequency and voltage deviation curves while simultaneously smoothing peak overshoots—conversely, both the standard PID and the GA-PID loops demand extended computational processing intervals.

Table 4. Comparative analysis for tuning algorithms.

Tuning methods	Controller gains		
	Ki	***Kp***	***Kd***
PID tuning	1.8701	1.0917	0.3869
GA-PID tuning	1.7755	1.0090	0.4141
PSO-PID tuning	1.7107	1.0489	0.3122

Conclusion

PSO-optimized PID control demonstrates a clear advancement over both standard PID and GA-tuned PID structures in terms of automated parameter determination, which can yield enhanced regulation quality. Nevertheless, this framework introduces a distinct compromise, exhibiting prolonged convergence behaviors and elevated computational overhead compared with a classical PID controller.

Tuning Methods and Controller Gains: The closing summary outlines the precise numerical configurations for the controller gains achieved through baseline PID tuning, GA-PID optimization, and PSO-PID tracking, alongside the

© 2024 The Author(s). | Published by Institute of Smart Energy Systems Press

resulting ITAE (Integral of Time-weighted Absolute Error) indices.

This paper has provided a systematic evaluation contrasting three evolutionary control mechanisms—GA-PID, PSO-PID, and standard PID controllers—for managing LFC and VC tasks within a hybridized power network. Among these, the simulation model for the standard PID loop was constructed by referencing legacy investigations available in published literature. In addition, two modernized modifications of the classical PID layout, designated as GA-PID and PSO-PID, were developed. These three computational strategies are graded against the following explicit benchmarks:

Convergence speed

· Traditional PID controller: Achieves a relatively rapid convergence state because it modulates the control parameters directly using the instantaneous error vector.

· GA-PID controller: The tracking convergence rate is bound to the total population size, the defined selection parameters, and specific genetic operators. It frequently requires numerous generations to isolate the definitive global optimum.

· PSO-PID controller: Generally registers a more rapid convergence path than the GA approach due to the continuous sharing of spatial data among particles, though it remains vulnerable to becoming trapped in local optimization traps.

Computational complexity

· Traditional PID controller: Presents minimal processing complexity since it relies on elementary mathematical actions without needing a population-driven search algorithm.

· GA-PID controller: Demands a higher processing capacity compared to the classical PID loop due to the mandatory evaluation of objective fitness scores across a large group of candidates during every generation, along with complex genetic operations.

· PSO-PID controller: Imposes a larger computational load than a standard PID setup because it must continuously process fitness formulas for an entire swarm of particles across each iteration cycle, alongside updating velocity and spatial coordinates.

Within the GA-PID controller setup, simulation records reveal a transient rise time of 0.324 s, a settling time that effectively drops to zero, and an extreme peak overshoot value reaching 29%. Conversely, integrating the PSO-PID loop yields superior operational improvements: the rise time drops to 0.246 s, and the settling time is marginally optimized to 0.38 second (representing an accelerated response rate or a shortened delay window). Furthermore, this tracking technique reduces the maximum peak overshoot by nearly 25%, delivering an exceptionally stable performance index of 6%. In particular, voltage fluctuations on the utility grid are minimized by 3.68%, load current deviations drop by 21.05%, and grid current variance is curtailed by 2.82%, resulting in superior power quality profiles and a highly pronounced enhancement in macroscopic system efficiency.

Ultimately, the PSO-PID control layout offers the distinct benefit of automated parameter optimization, which translates directly into superior grid regulation. However, the practical utilization of the PSO-PID architecture presents a clear trade-off, characterized by slower convergence profiles and expanded computational processing complexity relative to a conventional PID loop.

Acknowledgements

None

© 2024 The Author(s). | Published by Institute of Smart Energy Systems Press

Conflict of interest

None

Financial support

None

Ethics statement

None

Received: 30 Jan 2023 Revised: 06 Apr 2023 Accepted: 21 Apr 2023
Published online: 15 November 2024

Rights and permissions

Open Access The author(s) retain copyright. This article is licensed under the Creative Commons Attribution-NonCommercial-ShareAlike 4.0 International License. It may be shared and adapted for non-commercial purposes with appropriate attribution, an indication of changes, and distribution of adaptations under the same license. Third-party material may be subject to separate terms identified in its credit line. View the license at https://creativecommons.org/licenses/by-nc-sa/4.0/.

References

1. Mukundan NMC, Pychadathil J, Subramaniam U, Almakhles DJ. Trinary hybrid cascaded H-bridge multilevel inverter-based grid-connected solar power transfer system supporting critical load. IEEE Syst J. 2020;15(3):4116-25.

2. Sutikno T, Arsadiando W, Wangsupphaphol A, Yudhana A, Facta M. A review of recent advances on hybrid energy storage system for solar photovoltaics power generation. IEEE Access. 2022;10.

3. Li X, Li Z, Guo L, Zhu J, Wang Y, Wang C. Enhanced dynamic stability control for low-inertia hybrid AC/DC microgrid with distributed energy storage systems. IEEE Access. 2019;7:91234-42.

4. Magdy G, Ali H, Xu D. Effective control of smart hybrid power systems: cooperation of robust LFC and virtual inertia control systems. CSEE J Power Energy Syst. 2021;8(6):1583-93.

5. Khalid J, Ramli MA, Khan MS, Hidayat T. Efficient load frequency control of renewable integrated power system: a twin delayed DDPG-based deep reinforcement learning approach. IEEE Access. 2022;10:51561-74.

6. Babu N, Guerrero JM, Siano P, Peesapati R, Panda G. An improved adaptive control strategy in grid-tied PV system with active power filter for power quality enhancement. IEEE Syst J. 2020;15(2):2859-70.

7. Daraz A, Malik SA, Azar AT, Aslam S, Alkhalifah T, Alturise F. Optimized fractional order integral-tilt derivative controller for frequency regulation of interconnected diverse renewable energy resources. IEEE Access. 2022;10:43514-27.

8. Tiwari SK, Singh B, Goel PK. Design and control of autonomous wind–solar system with DFIG feeding 3-phase 4-wire loads. IEEE Trans Ind Appl. 2017;54(2):1119-27.

9. Kewat S, Singh B. Grid synchronization of WEC-PV-BES based distributed generation system using robust control strategy. IEEE Trans Ind Appl. 2020;56(6):7088-98.

10. Galus MD, Koch S, Andersson G. Provision of load frequency control by PHEVs, controllable loads, and a cogeneration unit. IEEE Trans Ind Electron. 2011;58(10):4568-82.

11. Singh B, Bhuvaneswari G. Sensorless SynRG based variable speed wind generator and single-stage solar PV array integrated grid system with maximum power extraction capability. IEEE Trans Ind Electron. 2019;67(9):7529-39.

12. Ochoa D, Martinez S. Modeling an isolated hybrid wind-diesel power system for performing frequency control studies. a case of study: san cristobal island, galapagos–ecuador. IEEE Lat Am Trans. 2019;17(5):775-87.

13. Serban E, Serban H. A control strategy for a distributed power generation microgrid application with voltage-and current-controlled source converter. IEEE Trans Power Electron. 2010;25(12):2981-92.

14. Yi Z, Dong W, Etemadi AH. A unified control and power management scheme for PV-battery-based hybrid microgrids for both grid-connected and islanded modes. IEEE Trans Smart Grid. 2017;9(6):5975-85.

15. Mendieta W, Cañizares CA. Primary frequency control in isolated microgrids using thermostatically controllable loads. IEEE Trans Smart Grid. 2020;12(1):93-105.

16. Zhang X, Meng D, Cai J, Zhang G, Yu T, Pan F, et al. A swarm based double Q-learning for optimal PV array reconfiguration with a coordinated control of hydrogen energy storage system. Energy. 2023;266:126483.

17. Parvin M, Yousefi H, Younes N. Techno-economic optimization of a renewable micro grid using multi-objective particle swarm optimization algorithm. Energy Convers Manage. 2023;277:116639.

18. Maleki A, Mehram A, Keynia F. Scrutiny of multifarious particle swarm optimization for finding the optimal size of a PV/wind/battery hybrid system. Renew Energy. 2015;80:552-63.

19. Zhang X, Wang Z, Lu Z. Multi-objective load dispatch for microgrid with electric vehicles using modified gravitational search and particle swarm optimization algorithm. Appl Energy. 2022;306(A):118018.

20. Saadaoui D, Elyaqouti M, Assalaou K, Hmamou DB, Lidaighbi S. Parameters optimization of solar PV cell/module using genetic algorithm based on non-uniform mutation. Energy Convers Manag X. 2021;12:100129.

21. Wang R, Zhang R. Techno-economic analysis and optimization of hybrid energy systems based on hydrogen storage for sustainable energy utilization by a biological-inspired optimization algorithm. J Energy Storage. 2023;66:107469.

22. Leon JA, Salgado CV, Palacios CC, Bello DD. Energy management model for a standalone hybrid microgrid through a particle swarm optimization and artificial neural networks approach. Energy Convers Manage. 2022;267:115920.

23. Daraz A. Optimized cascaded controller for frequency stabilization of marine microgrid system. Appl Energy. 2023;350:121774.

24. Daraz A, Malik SA, Basir A, Aslam S, Zhang G. Modified FOPID controller for frequency regulation of a hybrid interconnected system of conventional and renewable energy sources. Fractal Fract. 2023;7(1):89.

25. Zhang G, Daraz A, Khan IA, Basit A, Khan MI, Ullah M. Driver training based optimized fractional order PI-PDF controller for frequency stabilization of diverse hybrid power system. Fractal Fract. 2023;7(4):315.

26. Zhang P, Daraz A, Malik SA, Sun C, Basit A, Zhang G. Multi-resolution based PID controller for frequency regulation of a hybrid power system with multiple interconnected systems. Front Energy Res. 2023;10:1109063.

© 2024 The Author(s). | Published by Institute of Smart Energy Systems Press